PAPER

# Totally Robotic Roux-en-Y Gastric Bypass

*Catherine J. Mohr, MSME; Geoffrey S. Nadzam, MD; Myriam J. Curet, MD*

**Hypothesis:** We hypothesized that we could develop a safe and effective technique for performing a totally robotic laparoscopic Roux-en-Y gastric bypass procedure using the da Vinci surgical system. We anticipated that the learning curve for this totally robotic procedure could be shorter than the learning curve for standard laparoscopic bariatric surgery.

**Design:** Retrospective case comparison study.

**Setting:** Academic tertiary care center.

**Patients:** Consecutive samples of patients who met National Institutes of Health (NIH) criteria for morbid obesity and who completed the Stanford Bariatric Surgery Program evaluation process.

**Intervention:** A port placement and robot positioning scheme was developed so that the entire case could be performed robotically. The first 10 patients who underwent a totally robotic laparoscopic Roux-en-Y gastric bypass were compared with a retrospective sample of 10 patients who had undergone laparoscopic Roux-en-Y gastric bypass surgery.

**Main Outcome Measures:** Patient age, gender, body mass index (BMI), numbers of NIH-defined comorbidities, operative time, length of stay, and complications.

**Results:** No significant differences existed between the 2 patient series with regard to age, gender, or BMI. The median surgical times were significantly lower for the robotic procedures (169 vs 208 minutes; $P=.03$), as was the ratio of procedure time to BMI (3.8 vs 5.0 minutes per BMI for the laparoscopic cases; $P=.04$).

**Conclusions:** This study details the first report, to our knowledge, of a totally robotic laparoscopic Roux-en-Y gastric bypass and demonstrates the feasibility, safety, and potential superiority of such a procedure. In addition, the learning curve may be significantly shorter with the robotic procedure. Further experience is needed to understand the long-term advantages and disadvantages of the totally robotic approach.

*Arch Surg. 2005;140:779-786*

OBESITY IS A GROWING EPIdemic in the United States. Results of long-term weight loss with diet and exercise alone have been disappointing.[1] In 1991, the National Institutes of Health (NIH) recognized obesity as a growing epidemic, identifying the vertical banded gastroplasty and gastric bypass procedures as acceptable procedures based on available outcome data.[2] Since that time, the number of gastric bypasses performed in the United States has grown from 16 000 to 103 000 per year during the last 11 years.[3] This increase in demand for bariatric surgery necessitates an increase in advanced laparoscopic surgical training.

The laparoscopic Roux-en-Y gastric bypass is arguably the most challenging minimally invasive procedure in general surgery. Because the procedure demands advanced laparoscopic skills, such as suturing, intracorporeal knot tying, stapling, 2-handed tissue manipulation, and the ability to operate in multiple quadrants of the abdomen, the learning curve is 75 to 100 cases even for experienced laparoscopic surgeons.[4,5] Furthermore, limitations in conventional laparoscopic equipment, such as 2-dimensional visualization, counterintuitive instrument movement, limited range of motion of the instruments, and surgeon fatigue caused by abdominal wall torque, are impediments for surgeons who want to adopt the laparoscopic approach.

In 2000, the Food and Drug Administration (FDA) approved the da Vinci Surgical System (Intuitive Surgical Inc, Sunnyvale, Calif) for applications in general laparoscopic surgery. The robot is a telemanipulator instrument that allows the surgeon, from a remote console, to control up

**Author Affiliations:**
Department of Surgery, Stanford School of Medicine, Stanford, Calif.



©2005 American Medical Association. All rights reserved.
Downloaded From: http://archsurg.jamanetwork.com/ on 09/05/2015

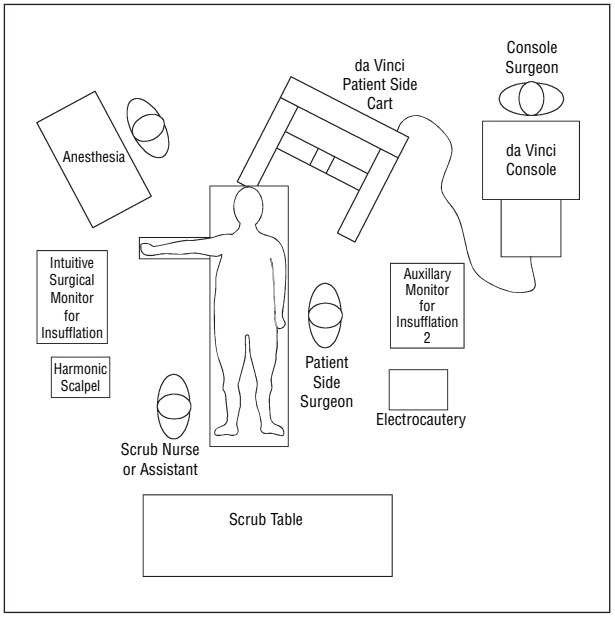


**Figure 1.** Operating room setup.

to 3 robotic arms and a binocular camera, rendering fine 3-dimensional imaging. The system uses instruments with a total of 7 *df*, including X, Y, and Z tip positioning, shaft rotation, wrist pitch (up-down), wrist yaw (left-right), and grip. Cardiere et al reported a series of robotic-assisted cases, concluding that use of the robot is "most beneficial for fine manipulations in a closed space."[6(p1475)] Since FDA approval, centers across the country have used the da Vinci surgical system for cases ranging from cholecystectomies to distal pancreatectomies.[7,8] In reviewing the literature, most procedures that require operating in more than 1 abdominal quadrant have required either extensive robot repositioning or robot use for only a portion of the total procedure, adding significant time to the operation.

The current experience with robotics and the Roux-en-Y gastric bypass is limited to performing a robotically sewn gastrojejunostomy, with the remainder of the case performed with traditional laparoscopy.[8] The goal of our study was to develop a port placement and robot-positioning scheme so that the entire case could be performed robotically without significant robotic repositioning. Furthermore, we compared this totally robotic laparoscopic Roux-en-Y gastric bypass with the standard laparoscopic approach performed at our institution. Our purpose was to assess the feasibility and safety of a robotic laparoscopic gastric bypass operation.

## METHODS

A variant of the laparoscopic Roux-en-Y gastric bypass as described by Higa et al[9] was adapted for the da Vinci robot. Port placement and robot positioning were developed in the laboratory initially with torso models and later tested and refined on cadavers. In preparation for starting the surgical procedures at the Stanford School of Medicine, the entire surgical team received the standard FDA-mandated training on the da Vinci surgical system at Intuitive Surgical.

After training, the team started performing totally robotic laparoscopic Roux-en-Y gastric bypasses within our established bariatric surgery program. All patients admitted to this program must meet the NIH criteria for weight reduction surgery, undergo extensive nutritional and psychological counseling, and achieve preoperative weight loss. All patients in the preoperative clinic who were candidates for laparoscopic surgery were offered the option of having their surgery performed with either the da Vinci system or the standard laparoscopic technique. All patients who were offered the robotic option chose to have the da Vinci procedure. A side-by-side comparison was undertaken, comparing our first 10 totally robotic laparoscopic Roux-en-Y gastric bypass procedures with the first 10 laparoscopic Roux-en-Y procedures performed by the same surgeon. Data were collected on patient age, gender, body mass index (BMI), numbers of NIH-defined comorbidities, operative time, length of stay, and complications to compare the 2 patient groups. The nonparametric Wilcoxon 2-sample rank test and Fisher exact test were used for continuous and discrete statistical comparisons, respectively.

## ROBOT SETUP

### Patient Positioning

The positioning, preparation, and draping of the patient are similar to those of a conventional laparoscopic Roux-en-Y gastric bypass with a few modifications. The principal change from our standard setup is that the operating table is rotated 15° to the patient's left so that the anesthesiologist is positioned off the patient's right shoulder. This allows the anesthesiologist access to the patient once the robot has been docked off the left shoulder. The table is set to 15° reverse Trendelenburg before start, the left arm is tucked to the side, and the right arm is extended for intravenous access (**Figure 1**). The robot is draped by a separate scrub nurse-circulator team while the patient is being draped.

### Port Placement and Procedure Start

Six ports are used (**Table 1** and **Figure 2**). The orientation of the left and right robot arms reflects the console surgeon's and assistant's left and right, not the patient's. All of the initial ports are 10/12-mm or 5-mm Ethicon Endopath (Ethicon Endosurgery, Cincinnati, Ohio) trocars with a long shaft (150-mm) cannula for the camera port. Because the Intuitive Surgical cannulas are 8 mm, they fit inside a 10/12-mm port. This double cannulation allows the robot arm to be removed from the port with the cannula still attached when the port is needed for a stapling tool. This also facilitates quick replacement of the robot arm.

The procedure is started by placing the camera port using an EndoPath Optiview nonbladed trocar (Ethicon Endosurgery) and a 0° conventional laparoscope. Pneumoperitoneum is established, and the remainder of the first 5 ports (left arm [L], right 1 [R1], right 2 [R2], assistant 1 [A1], and assistant 2 [A2] hereafter referred to by their abbreviations) are placed under direct visualization. The laparoscope is used to survey the abdominal cavity, and any adhesions are lysed with an Ethicon Ultracision Harmonic Scalpel (Ethicon Endosurgery). The transverse mesocolon is retracted superiorly with a standard laparoscopic grasper inserted through the A2 port, allowing visualization of the ligament of Treitz (LT). The robot is then rolled in and docked for the remainder of the procedure.

### Robot Positioning

The robot base is positioned off of the patient's left shoulder at a steep angle (15°-30° off patient midline) and as close to the



©2005 American Medical Association. All rights reserved.
Downloaded From: http://archsurg.jamanetwork.com/ on 09/05/2015

**Table 1. Port Placement**

| | Left Arm | Camera | Right 1 | Assistant 1 | Assistant 2 | Right 2 |
|---|---|---|---|---|---|---|
| Placement | Patient's RUQ 5 cm lateral of midline, below costal margin | Midline 3-5 cm above umbilicus | Patient's left side, 15 cm lateral to and at the same level as the camera | Patient's left side midway between camera and right 1, 0-3 cm below the umbilicus | RUQ, MCL below costal margin | LUQ, MCL, and 0-5 cm below costal margin* |
| Port type | Double-cannulated 10/12–mm Ethicon,† Intuitive Surgical‡ cannula inside | 10/12–mm Ethicon† | Double-cannulated 10/12–mm Ethicon† with Intuitive Surgical‡ cannula | 10/12–mm Ethicon† | 5–mm Ethicon† | Intuitive Surgical‡ cannula |

Abbreviations: LUQ, left upper quadrant; MCL, midclavicular line; RUQ, right upper quadrant.
*Should be moved caudally when necessary to avoid collisions between the right robot tool holder and the camera arm.
†Ethicon Endosurgery, Cincinnati, Ohio.
‡Intuitive Surgical Inc, Sunnyvale, Calif.

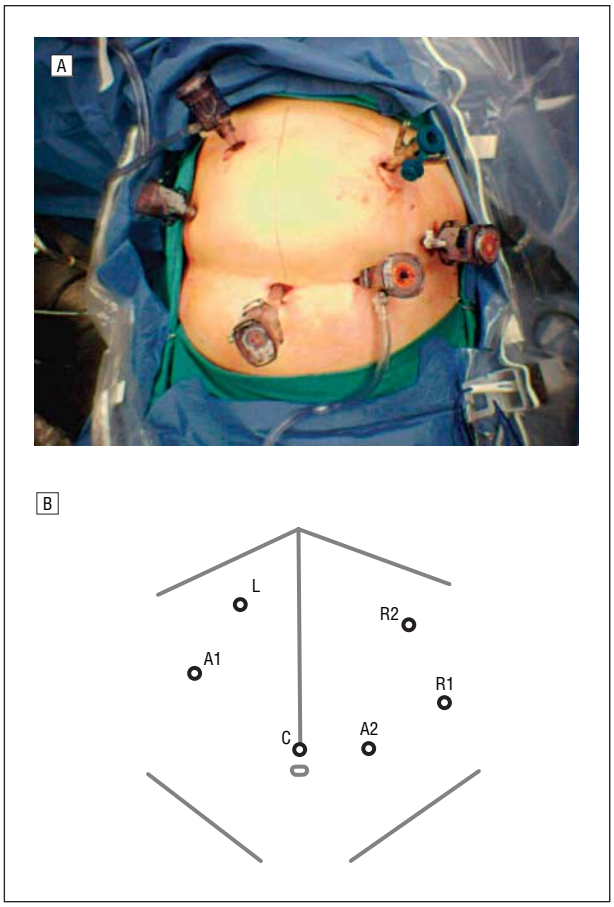


**Figure 2.** Operative port placement. A, Port positions in a patient. B, Diagram of port placement. L indicates left; C, camera; A1, assistant 1; A2, assistant 2; R1, right 1; and R2, right 2.

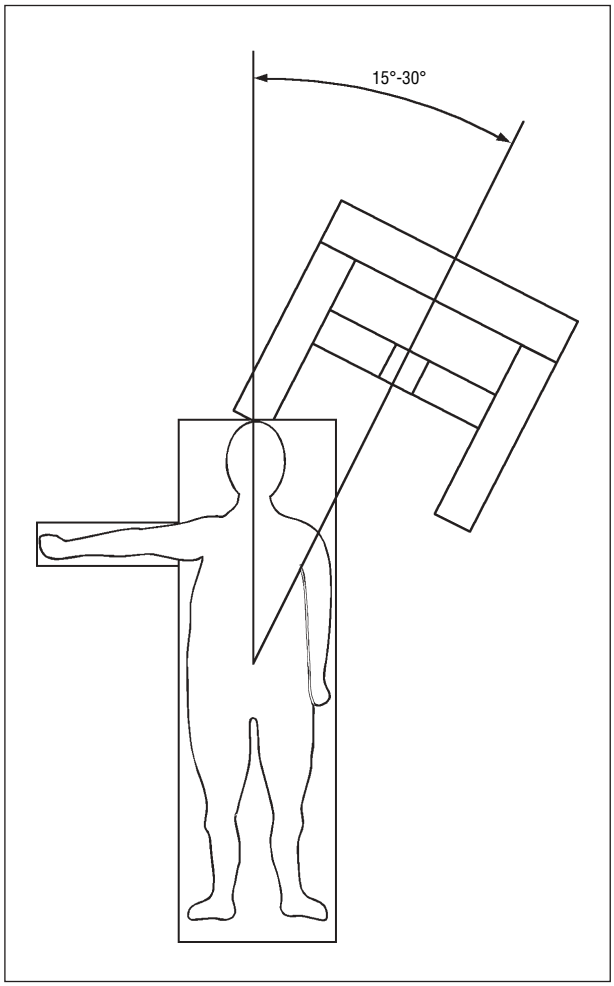


**Figure 3.** Base position with respect to the operating room table.

table as the base permits. The legs should be parallel to a line between the robot base and the camera port (**Figure 3**). To avoid collisions, the redundant camera setup joints should be skewed away from the patient toward the right robot arm (**Figure 4**). The left arm should be positioned such that the external yaw axis is as close to vertical as possible, with the *U*-shaped metal frame pointing toward the camera arm (**Figure 5**). The right arm should be brought in relatively low, and the setup joints tucked close to the base so that the tool holder is in the middle of its range of motion in the pitch axis.

## Robotic Procedure

Once the robot is docked, the bowel may be manipulated by the console surgeon with Cadiere graspers (Intuitive Surgical, Sunnyvale, Calif) or bowel graspers. The patient side assistant also aids in manipulating and running the bowel. The assistant transects the bowel 20 to 40 cm from the LT using a 45-mm ETS-Flex stapler (Ethicon Endosurgery) with a 45-mm white cartridge (2.5 mm) through the A1 port. The jejunal mesen-



©2005 American Medical Association. All rights reserved.
Downloaded From: http://archsurg.jamanetwork.com/ on 09/05/2015

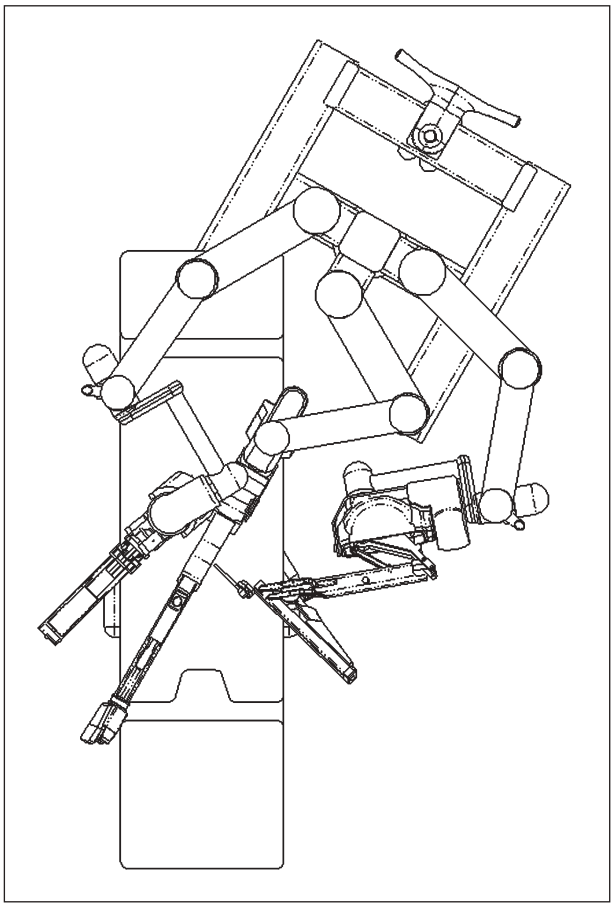

**Figure 4.** Top view of setup joint position.

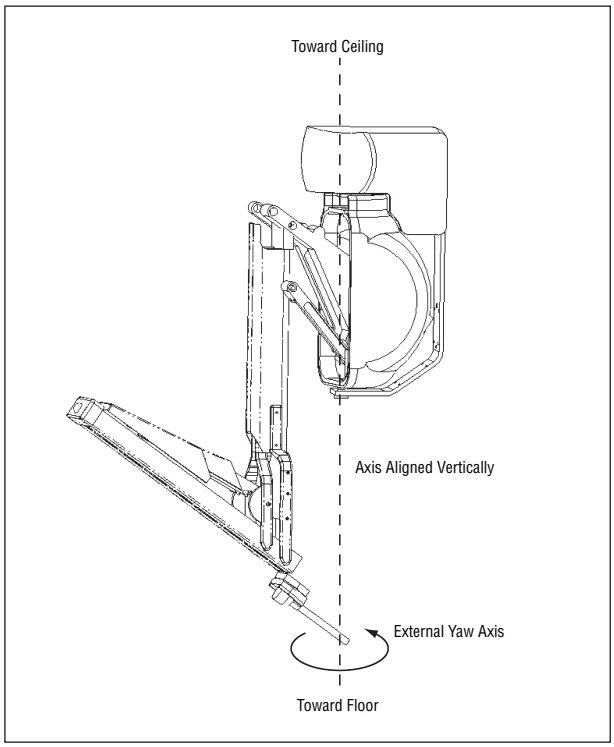


**Figure 5.** Left arm positioning with the "cradle" aligned vertically, showing the external yaw axis.

tery is further divided by the assistant using a LigaSure Atlas (Valleylab, Boulder, Colo). As an alternative, the da Vinci Ultrasonic Shears could be used for mesenteric division. The assistant and the console surgeon then measure 100 to 150 cm of bowel for the Roux limb and align the Roux and biliopancreatic limbs. The console surgeon places a 7-in 3-0 Ethibond (Ethicon Endosurgery) stay stitch, aligning the bowel for the jejunojejunostomy using a needle driver and Debakey forceps. The needle driver is replaced with the Endowrist Permanent Electrocautery Hook (Intutitive Surgical), and the console surgeon creates enterotomies below the stay stitch. Then the console surgeon uses the stay stitch to provide countertraction for the assistant to complete the internal portion of the jejunojejunostomy with the linear stapler. The needle driver is replaced, and the console surgeon closes the enterotomy with a running 3-0 Ethibond single-layer suture. The mesenteric defect is then closed with figure-of-eight interrupted sutures. The transverse colon retraction is released from the A2 port. As we bring the Roux limb antecolic, the console surgeon grasps the omentum with Cadiere graspers and presents it for division by the assistant with a Ligasure Atlas. Once the omentum is split, the work in the LT area is complete, and the robot is shifted for work in the gastroesophageal (GE) area.

Preparation for working in the GE area involves removing the right robot arm from the R1 double cannulated port, inserting the Intuitive Surgical port at the R2 position, and redocking the arm. The liver is retracted using a 5-mm liver retractor through the A2 port and held in place with a laparoscopic instrument holder (Thompson Surgical Instruments, Traverse City, Mich). The console surgeon repositions the tools and camera to visualize the angle of His. The console surgeon now performs the angle of His dissection with the electrocautery hook. When completed, dissection of the gastric pouch begins. We measure approximately 5 cm along the lesser curve and use the electrocautery hook to dissect at this location into the retrogastric space. The assistant removes the left robotic arm from the double cannulated (L) port, introduces the stapler, and creates the lower border of the gastric pouch with a blue cartridge (3.5 mm). The left robot arm is replaced, and the console surgeon provides traction for the assistant to staple the lateral border of the pouch, which is sized using a transoral 36F tube. An esophageal retractor is used to aid in completing transection of the stomach. The console surgeon then creates the enterotomies and a 2-layer sutured anastomosis. The outer and inner layers are sutured with running 7-in and 6-in 3-0 Ethibond sutures, respectively. The 36F tube is used to stent the anastomosis open while completing the anterior layers. The anastomosis is insufflated underwater to test for leaks. The robot and all ports are removed and the skin incisions closed.

## RESULTS

The first 10 patients who underwent a laparoscopic gastric bypass (performed by M.J.C.) had their operations performed during July to September 2002. The first 11 patients in whom the robotic technique was used were operated on during March and April 2004. A male patient in the robotic series was excluded from analysis. He had to be converted to an open procedure because his liver was too large to be retracted laparoscopically. All remaining patients in both groups were female.

No significant differences existed between the 2 patient groups in age, BMI, or numbers of comorbidities. The number and severity of complications were comparable, as were the number of patients who remained in



©2005 American Medical Association. All rights reserved.
Downloaded From: http://archsurg.jamanetwork.com/ on 09/05/2015

**Table 2. Laparoscopic vs Robotic Group Comparisons**

| | First 10 Laparoscopic Cases | First 10 Robotic Cases | *P* Value |
|---|---|---|---|
| Median age, y (range) | 45.5 (33-53) | 38.5 (34-52) | .91 |
| Median BMI (range) | 43.0 (36.2-52.8) | 45.6 (36.6-59) | .88 |
| Median No. of comorbidities (range) | 2 (0-3) | 1 (0-2) | .31 |
| Median operative time, min (range) | 208 (135-315) | 169 (119-294) | .03 |
| Median operative time per BMI (range) | 5.0 (3.5-7.8) | 3.8 (2.9-5.2) | .04 |
| No. of patients with an extended length of stay | 3 | 2 | >.99 |
| No. of complications (minor) | 3 | 2 | >.99 |
| No. of complications (major) | 2 | 2 | >.99 |

Abbreviation: BMI, body mass index (calculated as weight in kilograms divided by the square of height in meters).

**Table 3. BMI and Surgery Time per Laparoscopic and Robotic Surgery Patients**

| | Surgery Time, min per BMI | |
|---|---|---|
| Case No. | Laparoscopic | Robotic |
| 1 | 5.8 | 5.19 |
| 2 | 7.52 | 5.05 |
| 3 | 5.78 | 4.15 |
| 4 | 4.94 | 4.98 |
| 5 | 5.67 | 3.17 |
| 6 | 4.52 | 3.65 |
| 7 | 4.56 | 3.97 |
| 8 | 3.84 | 3.12 |
| 9 | 5.04 | 3.62 |
| 10 | 3.49 | 2.87 |

Abbreviation: BMI, body mass index (calculated as weight in kilograms divided by the square of height in meters).

the hospital past the standard length of stay (**Table 2**). Major complications were defined as those that required a subsequent operation to correct. In the first 10 laparoscopic cases, one patient developed an anastomotic leak and another required a revision of the jejunojejunostomy. In the first 10 robotic cases, one patient was returned to the operating room for an exploratory laparoscopy for postoperative fever and tachycardia to rule out an anastomotic leak. No leak was identified, and the patient responded well to empirical antibiotic treatment for *Clostridium difficile*. Another patient required surgical closure of a small bowel perforation proximal to the jejunojejunostomy, which was believed to have been caused by a tool insertion. Minor complications were successfully managed medically. In the first 10 laparoscopic cases, 3 patients had minor complications, including an urinary tract infection, a postoperative migraine, and an incisional bleed that required tamponade with a Foley balloon. In the first 10 robotic cases, one patient had an asthma exacerbation during resuscitation and another developed a minor infection of one of the trocar sites.

The median length of time to complete the procedure was significantly shorter with the robot (169 vs 208 minutes; $P=.03$). In addition, the ratio of procedure time to BMI was considerably lower with the robot (median, 3.8 vs 5.0 minutes per BMI for the laparoscopic cases; $P=.04$). Moreover, the rate at which the operative times improved indicate that the learning curve for the robotic procedure is considerably shorter (**Table 3** and **Figure 6**). We found that the mean minutes per BMI of our second 5 robotic procedures was 3.45 minutes, whereas the laparoscopic data for our senior attending surgeon did not attain a comparable 5-case mean of the metric until case 42. In addition, when the data from a bariatric fellow from the same institution were compared, that surgeon did not match the metric until surgical case 85.

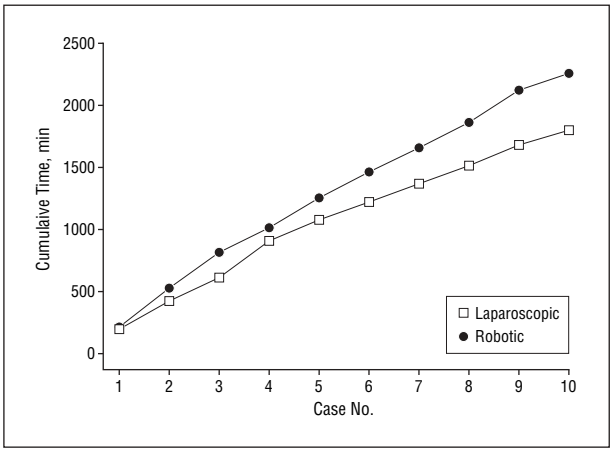


**Figure 6.** Graph of learning curve.

## COMMENT

The exponential increase in bariatric operations performed during the last decade has led to a sharp increase in the number of surgeons who require advanced laparoscopic training. More than half of the bariatric operations performed in 2003 were laparoscopic procedures, according to the American Society of Bariatric Surgeons.[3] Advanced laparoscopic skills such as intracorporeal knot tying, effective use of angled laparoscopes, and 2-handed organ and tissue manipulation are required. These skills can be challenging even to surgeons trained in advanced laparoscopy. However, the application of laparoscopic techniques to morbidly obese patients adds another set of obstacles, such as increased abdominal wall torque on the cannulae and awkward surgeon posture.

The advent of surgical robotics has led to a reduction in some of the most difficult challenges in advanced laparoscopy. Omote et al[10] demonstrated that a robotically controlled camera during laparoscopic procedures is superior to human control. General surgeons who are using the system for robotic-assisted cases state that the ability to manipulate tissue with wristed instruments that allow 6 *df* is an improvement, which is most apparent during suturing and fine tissue dissection.[8] Ruurda et al[11] compared the time requirements and accuracy associ-



©2005 American Medical Association. All rights reserved.
Downloaded From: http://archsurg.jamanetwork.com/ on 09/05/2015

ated with sewing small-bowel anastomoses laparoscopically and robotically and found the greatest benefit of the robotic system when sewing a vertically oriented anastomosis, such as is required for the gastrojejunostomy. This finding is further supported by Jacobsen et al,[12] who queried the 11 surgeons across the country currently using the da Vinci system for Roux-en-Y gastric bypass, gastric banding, or biliary pancreatic diversion. These surgeons found the laparoscopic, robotically assisted, hand-sewn gastrojejunostomy superior to any currently available, minimally invasive anastomotic technique. According to our surgeons, suturing both the gastrojejunostomy and the jejunojejunostomy was perceived to be technically easier with the robot compared with standard laparoscopy.

Standard laparoscopic gastric bypass is an ergonomically challenging procedure. By separating the surgeon from the patient, the robotic procedure completely alleviates this issue as the surgeon sits at a comfortable, ergonomically designed console. The surgeons in our study concurred with the findings of Talamini et al,[8] and thought that the ergonomics improved significantly at the console position and the patient side position. No torque effects were noticed by the console surgeon, especially in those patients with higher BMIs.

One of the criticisms of routine robotic use is the increased operating room times associated with the learning curve of the robot. Institutions that have extensively used the da Vinci system have shown that for certain "basic training model" cases (Nissen and cholecystectomy), the learning curve on the system was 20 operations, at which point total operating room times with the robot matched those of the equivalent laparoscopic cases.[13] This study and another by Hanly et al[14] revealed a learning curve for the surgical team associated with robot manipulation and setup during surgery to be 3 to 5 cases. In our experience, by the fifth robotic case, operating room times were consistently reduced to less than 2.5 hours, matching those of our current laparoscopic gastric bypass cases. In contrast, a consistent operating room time of less than 2.5 hours was obtained only after the 32nd laparoscopic case.

To further examine the learning curve, we evaluated the minutes per BMI metric for the procedures, which accounts for the increasing difficulty of the surgery with increasing BMI and therefore allows easier cross-comparison. The mean duration per BMI of our second 5 robotic procedures was 3.45 minutes. Laparoscopic procedures by our senior surgeon (M.J.C.) and another attending physician at our institution attained a 5-case mean of 3.45 minutes per BMI in cases 42 and 85, respectively. This finding is consistent with the findings of Schauer et al[4] and Oliak et al,[5] who found that the learning curve for laparoscopic Roux-en-Y gastric bypass was 100 and 75 cases, respectively. This is a particularly notable contrast as the surgical team simultaneously climbed the robotic learning curve and the procedure learning curve during the first 10 totally robotic laparoscopic Roux-en-Y gastric bypass cases.

Another criticism of routine robotic use in the operating room when compared with advanced laparoscopy is prolonged setup times before surgery. Other authors have found that setup times decrease rapidly with experience.[8,13,15,16] In the current study, setup time was minimized by having 2 scrub nurses, one to do the standard preparation and draping of the patient and the other to prepare and drape the robot. By working in parallel, the robot setup and draping could be completed in the same time that it took to drape the patient for a standard laparoscopic surgery. However, when compared with standard laparoscopic procedures, robotic surgery cases are associated with unavoidable additional setup time issues as the system base must be moved into position and the arms positioned and attached to the cannulae. Repositioning the base of the robot during surgery or radically repositioning the arms can add significant time to a procedure. However, in our study, we devised an initial robotic setup and a logical schedule of 2 minor arm adjustments that allowed a rapid reduction in operating room times as we became more facile with the robot. In particular, the ability to maintain the robot base in a single orientation with respect to the patient, despite the need to work in distant abdominal quadrants, significantly reduced our operative times, thus making the use of the robot more attractive to the surgeons and operating room staff alike. In addition, by our fifth case, robotic tool changes were achieved almost as rapidly as laparoscopic tool changes.

For a 2-quadrant surgical procedure such as the standard laparoscopic Roux-en-Y gastric bypass, laparoscopic tools are regularly moved through 180° or more so that the greatest operative area may be reached from a minimum number of ports. With a standard da Vinci setup in which the pitch axis is used to move between surgical areas, mechanical constraints of the robot limit the movement to 104° (±52° from center). The challenge was to devise port placements and arm positions so that the operating spaces in the LT area and GE area could be reached with a single robot setup and be unencumbered by the robotic joint limitations. The solution that enabled us to perform 2-quadrant surgery ended up being a nonstandard left arm position, which allowed the movement from the LT to the GE areas to be accomplished with the robot's external yaw axis rather than the pitch axis (Figure 5). Because the R1 operative port is placed caudally to both operative areas, we are able to access the LT and GE positions with a more standard arm setup, but we end up limited more by the tool reach (insertion axis). For a patient with a short torso, the approximately 20-cm maximum insertion reach is sufficient to allow movement and unhampered manipulation in both areas, but for most patients, the GE area is too far away to be reached from below the LT area. This may be addressed in the future with longer tools, but with the existing da Vinci tools, we move the robot arm from a lower port to an upper operative port partway through the procedure. The first port is then used as an assistant access port. The double cannulation technique of inserting an Intuitive Surgical cannula inside an Ethicon port allowed quick docking and undocking of a robot arm, greatly increasing the utility of all of the ports.

Reluctance to use new technology such as the da Vinci surgical robot often reflects surgeon concern over increasing complication rates, increased operative times, and steep learning curves. Any new technology must be proven fea-



©2005 American Medical Association. All rights reserved.
Downloaded From: http://archsurg.jamanetwork.com/ on 09/05/2015

sible and safe. Our results support the robot's feasibility in the Roux-en-Y gastric bypass as we achieved comparable operating room times with an extremely short learning curve. Designing efficient port placement and using a nonstandard left robotic arm position has enabled the entire case to be performed robotically, unlike our surgical colleagues, who limit their robotic applications to the gastrojejunostomy. Likewise, both major and minor complications were similar between the robotic and laparoscopic group, suggesting that a totally robotic laparoscopic gastric bypass is a safe and potentially superior alternative to traditional laparoscopic gastric bypass.

**Accepted for Publication:** April 21, 2005.
**Correspondence:** Myriam J. Curet, MD, H3680 Department of Surgery, Stanford Hospital, 300 Pasteur Dr, Stanford, CA 94305 (mcuret@stanford.edu).
**Previous Presentation:** This paper was presented at the 76th Annual Meeting of the Pacific Coast Surgical Association; February 19, 2005; Dana Point, Calif; and is published after peer review and revision. The discussions that follow this article are based on the originally submitted manuscript and not the revised manuscript.

## REFERENCES

1. Grodstein F, Levine R, Troy L, Spencer T, Colditz G, Stampfer M. Three-year follow-up of participants in a commercial weight loss program: can you keep it off? *Arch Intern Med.* 1996;156:1302-1306.
2. Conference NIH: gastrointestinal surgery for severe obesity. *Ann Intern Med.* 1991; 115:956-961.
3. Steinbrook R. Surgery for severe obesity. *N Engl J Med.* 2004;350:1075-1079.
4. Schauer P, Ikramuddin S, Hamad G, Gourash W. The learning curve for laparoscopic Roux-en-Y gastric bypass is 100 cases. *Surg Endosc.* 2003;17:212-215.
5. Oliak D, Owens H, Schmidt HJ. Laparoscopic Roux-en-Y gastric bypass: defining the learning curve. *Surg Endosc.* 2003;17:405-408.
6. Cadiere GB, Himpens J, Germay O, et al. Feasibility of robotic laparoscopic surgery: 146 cases. *World J Surg.* 2001;25:1467-1477.
7. Melvin WS, Needleman B, Krause K, Wolf R, Michler R, Ellison E. Computer-enhanced vs. standard laparoscopic antireflux surgery. *J Gastrointest Surg.* 2002;6:11-15.
8. Talamini MA, Chapman S, Horgan S, Melvin WS; The Academic Robotics Group. A prospective analysis of 211 robotic-assisted surgical procedures. *Surg Endosc.* 2003;17:1521-1524.
9. Higa KD, Ho T, Boone KB. Laparoscopic Roux-en-Y gastric bypass: technique and 3-year follow-up. *J Laparoendosc Adv Surg Tech A.* 2001;11:377-382.
10. Omote K, Feussner H, Ungeheuer A, et al. Self-guided robotic camera control for laparoscopic surgery compared with human camera control. *Am J Surg.* 1999; 177:321-324.
11. Ruurda JP, Broeders IAMJ, Pulles B, Kappelhof FM, van der Werken C. Manual robot assisted endoscopic suturing: time-action analysis in an experimental model. *Surg Endosc.* 2004;18:1249-1252.
12. Jacobsen G, Berger R, Horgan S. The role of robotic surgery in morbid obesity. *J Laparoendosc Adv Surg Tech A.* 2003;13:279-284.
13. Giulianotti P, Coratti A, Angelini M, et al. Robotics in general surgery: personal experience in a large community hospital. *Arch Surg.* 2003;138:777-784.
14. Hanly EJ, Marohn MR, Bachman SL, et al. Multiservice laparoscopic surgical training using the daVinci surgical system. *Am J Surg.* 2004;187:309-315.
15. Chapman WH III, Albrecht RJ, Kim VB, Young JA, Chitwood WR. Computer-assisted laparoscopic spenectomy with the da Vinci trade mark surgical robot. *J Laparoendosc Adv Surg Tech A.* 2002;12:155-159.
16. Melfi FM, Menconi GF, Mariani AM, Angeletti CA. Early experience with robotic technology for thoracoscopic surgery. *Eur J Cardiothorac Surg.* 2002;21:864-868.

## DISCUSSION

**Ninh T. Nguyen, MD, Orange, Calif:** In this paper, Dr Curet and colleagues reported a novel approach of total robotic laparoscopic gastric bypass. The current experience in the literature has been limited to primarily robotically assisted laparoscopic gastric bypass. This report represents the first attempt at performing a complex laparoscopic operation totally robotically. Dr Curet and colleagues found that total robotic gastric bypass was technically feasible and safe and associated with a shortened learning curve with regard to operative time; however, they also observed a learning curve for the use of robotic instrumentation as an inadvertent small-bowel perforation was attributed directly to its use. This phenomenon of shortening the learning curve has also been observed with robotic prostatectomy, whereby urologists with minimal laparoscopic experience can perform robotic prostatectomy with ease.

In our small experience with robotic gastric bypass, some of the disadvantages that we encountered after having passed our learning curve of laparoscopic gastric bypass include a prolonged operative time, no obvious clinical differences in outcomes, prolonged turnover time, and the requirement of an experienced surgeon to be at the operating table to perform the stapling portion of the procedure. Some of our current cases consist of a single surgeon and a scrub technician. Although the robotic setup time can be improved with experience, the long turnover time continues because of the need for cleaning and sterilizing our single robotic instrument tray, whereas we often have 4 to 5 available laparoscopic instrument trays for use.

For my first question, are you suggesting that surgeons attempting to learn gastric bypass should learn how to perform robotic gastric bypass first because of the shortened learning? Even if this is true, it is important for surgeons to start their training in bariatric surgery with open gastric bypass with progression to laparoscopic gastric bypass and then add robotic gastric bypass once they have achieved their learning curve of the laparoscopic approach. As stated in the manuscript, one patient in the robotic group required conversion to the open approach, and I am sure that you have encountered some conversion to the laparoscopic approach, and the surgeon must have the laparoscopic skills to complete the procedure.

For my second question, now that the authors have passed their learning curve of laparoscopic gastric bypass and their operative time for the laparoscopic approach is consistently less than 2.5 hours, have the authors observed any clinical benefits of robotic gastric bypass, such as reduction in postoperative pain, shortened length of stay, or decrease in morbidity, and have you altogether abandoned laparoscopic gastric bypass? A previous randomized trial of laparoscopic Nissen compared to robotic Nissen was not able to demonstrate any clinical benefits of the robotic approach.

Lastly, I know that you did not evaluate cost in this study; however, how have you been reimbursed for the use of this expensive technology?

**Lygia Stewart, MD, San Francisco, Calif:** You compared your robotic experience to the first 10 laparoscopic gastric bypasses done by your very experienced surgeon. The problem is that between his/her first 10, they may have done hundreds and it is not necessarily an accurate comparison unless you were to compare 2 novice surgeons. Also, there are a lot of aspects to the case that aren't pure robot surgery. Do you really think that it is truly valid to compare his/her first 10 laparoscopic gastric bypasses with the first 10 robotic? Your differences were pretty small. I think the questions are, (1) how many laparoscopic gastric bypasses had this surgeon done in between the first 10 and starting the robotic program and (2) have you looked at the novice surgeon? I think that would really be more useful.

The other question is, what about cost? What did it cost to train your operating room staff, because in our experience the big thing is the setup time and your group had the luxury of having your operating room staff go and be trained. Did you have several teams that you trained, are these the only teams



©2005 American Medical Association. All rights reserved.
Downloaded From: http://archsurg.jamanetwork.com/ on 09/05/2015

that did the robotic procedures, and how did this correlate to your decreased setup time, which I think was crucial to your outcomes.

Lastly, I agree with Dr Nguyen that the cost of the robotic instruments is significant, and I think that in any comparison this really has to be addressed.

**James E. Goodnight, MD, Sacramento, Calif:** Dr Wilson, Dr Stewart is an expert, Dr Curet is an expert, and Dr Nguyen is an expert, so I should take a hint and perhaps not comment. But I actually wanted to rise to reassure you that the robot will not replace you; it will extend your surgical career. I torture my faculty with this thought, and as I describe to them, they can bring you in when you are 89 in your wheelchair, lift you out, put you in the da Vinci, and put your Foley in. You will have magnified vision, and you will have an instrument that takes away the tremor. The only problem is they will have to periodically go and wake you up. Perhaps in a more serious vein, my understanding again as a noncombatant is that average laparoscopists complete this operation in less than 150 minutes. So then I was really puzzled with the reversal of the length of operation with the laparoscopic procedure here vs the robot. Our experience is that it actually takes more time to do the robot, so I was intrigued.

**Ronald G. Latimer, MD, Santa Barbara, Calif:** I want to caution the members about the seduction of robotics. We are seeing urologists demanding that robots be purchased so that they can learn to do laparoscopic prostatectomies. I am not sure that this is the best or safest approach for patients. The fact that surgeons may have to open the patient or might actually need to revert to standard laparoscopic techniques demands that this basic training be a requirement before a robot is purchased. Robots do malfunction, so a backup system is imperative. We should not be seduced to buy this instrument to train surgeons if they are not able to do the primary operations themselves.

**Lee L. Swanstrom, MD, Portland, Ore:** This was an interesting paper. I noticed that you call this procedure a "totally robotic" approach, and yet it looked like you had a very skilled laparoscopic assistant who did a lot of the work. What percent of the time was the robot actually used in these cases, and was that skilled assistant the same one who was used as the assistant in the laparoscopic cases?

**S. Eric Wilson, MD, Orange:** In general, is there any increase in deep venous thrombosis with robotic surgery?

**Dr Curet:** Thank you, Drs Wilson and Nguyen. I appreciate your review of the paper and your comments. I will take your questions first. I don't know whether we have enough experience yet with the robot to suggest that somebody who is a novice learning this procedure ought to learn on the robot. Our preliminary data seem to suggest that there are some real advantages to learning the procedure on the robot before you do it laparoscopically. I think that is especially true if you are going to do a hand-sewn gastrojejunostomy, which is technically extremely difficult to do. I think perhaps if you are going to do a stapled gastrojejunostomy, there may be less of an advantage to the robot.

Once you have passed the learning curve, we have not seen a difference in the clinical benefit of the robot to the patient in terms of length of stay, pain, or complication rates. I think there may still be an advantage in terms of operating room times being shorter with the robot. In addition, there may be a benefit to the surgeon to perform the operation robotically with improved ergonomics and less neuropathies and musculoskeletal strain than is seen with laparoscopic procedures.

In terms of reimbursement, we basically are being reimbursed for a robotic case like we are for a laparoscopic case. When we looked at the cost of the instruments themselves, it has turned out to be equivalent, whether we use the robot or do a pure laparoscopic case. So the real additional cost is the cost of buying the robot. I know that from a urology point of view, there is a benefit to the hospital because it brings in cases that are not being brought in if the hospital cannot offer robotic prostatectomies. I don't believe that that is the case for gastric bypasses. Patients want their gastric bypasses, and they are even willing to have open surgery if that is the only way they can get it done. So I think that the cost to the hospital of buying the robot will probably have to be amortized over other operations that are done, including prostatectomies and perhaps cardiac surgery, instead of just looking at amortizing it over gastric bypasses.

Dr Stewart, I agree with your comments about this comparison. The person who was actually at the console for the robotic cases was the fellow so as to minimize the bias of my experience and my learning curve. However, to get a more accurate result, we are currently doing a study with our new fellow who is doing robotic cases and doing laparoscopic cases, and we are evaluating his learning curve as a novice to the procedure. Hopefully, we will have those results for you next year.

In terms of setup times and training of the operating room staff, we had 2 scrub techs and 2 circulators come down to Intuitive with us to learn how to do it. It actually is the recommendation of the company that the operating room staff is trained as well as the surgeons. Those people have then trained other people in the operating room, and we have not seen, as we have new people coming into the operating room, that our setup time has increased.

We are currently not performing all of our gastric bypasses robotically because not everyone will have access to a robot, and therefore, we feel that in order to train our fellows appropriately, they really need to learn how to do laparoscopic procedures. Our fellows actually are in a unique position where they are learning hand-sewn, stapled, and robotic, all at the same time. So they should be able to cope with whatever practice situation they are in when they finish.

We have found that the robotic setup times and the overall robotic operating room times are less than what has been reported in the literature, as was suggested. Usually the robotic cases are longer than the laparoscopic cases, and we have not found that. I think that that is partially due to how much time we spent learning the technique in the laboratory.

Dr Swanstrom, we perform the entire operation robotically in terms of the console surgeon controlling the robot and using those 2 instruments either for manipulating the bowel or doing the suturing. You do need a patient side assistant that brings in the suture and brings in the stapler, but that is basically all that the patient side assistant is doing. We set it up so that the fellow is at the console, and I am at the patient side assistant. However, that can be done in any way, and I think as long as somebody who is familiar with the operation is at the patient side, you don't need 2 surgeons. You can have a scrub tech or a physician assistant at the patient side performing that portion of the operation.

In terms of deep venous thrombosis prophylaxis, Dr Wilson, I don't know that there is a higher risk of this with robotic surgery. That has not been reported. We do put the patient in a reverse Trendelenburg position and do still use pneumoperitoneum of 15 mm Hg pressure, so those risk factors are the same for the robotic and laparoscopic procedures.



©2005 American Medical Association. All rights reserved.
Downloaded From: http://archsurg.jamanetwork.com/ on 09/05/2015